Mounting Instruction

Skylight Blind - Sideguides

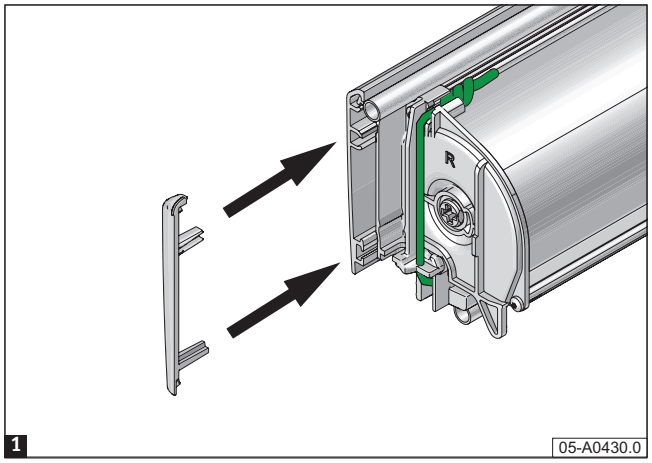

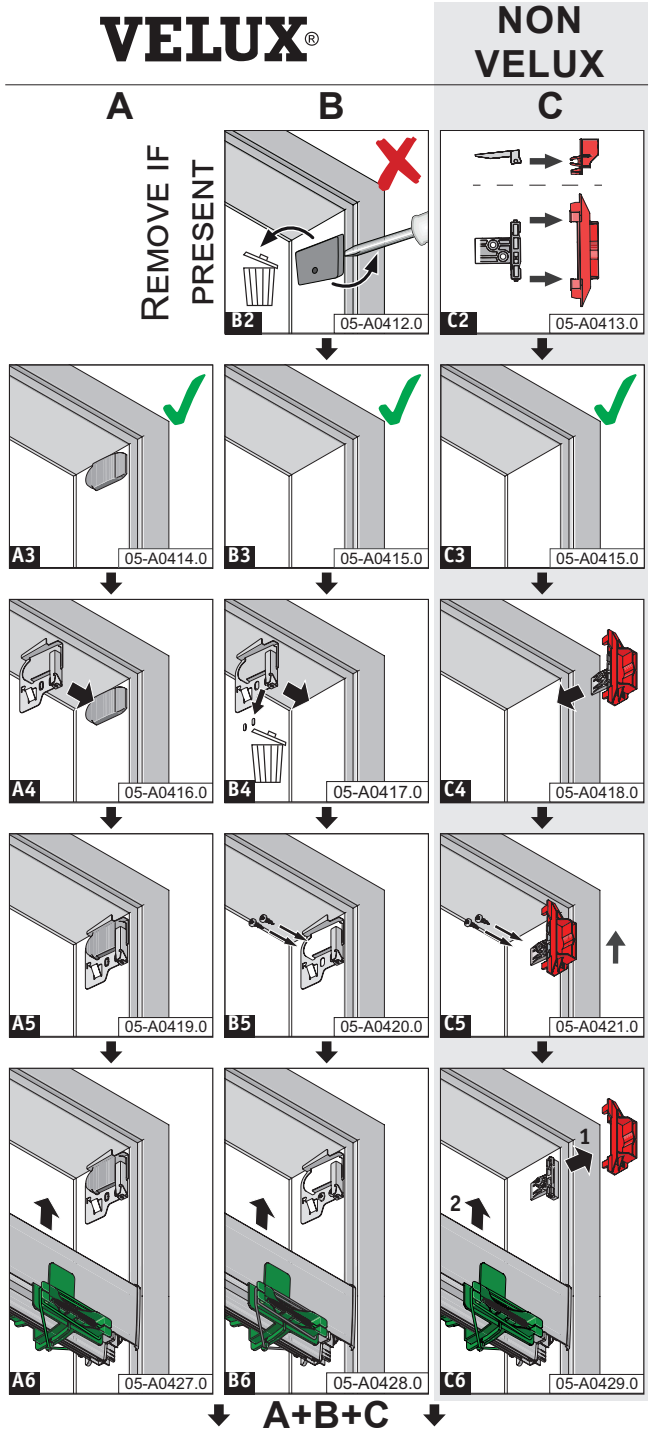

HunterDouglas

Velux® and Velux® logo are registered trademarks of the Velux Group

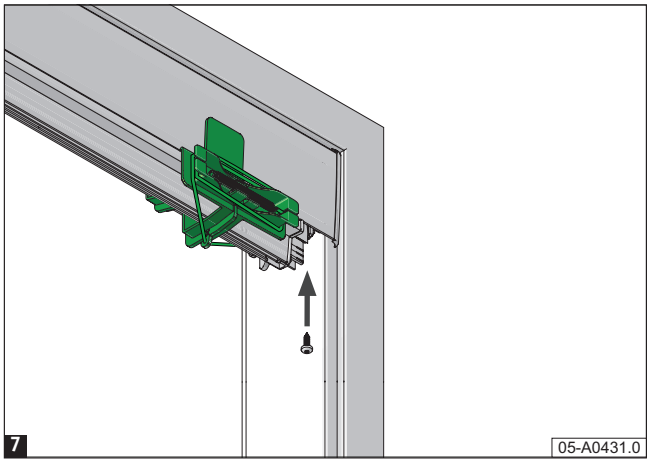
7
05-A0431.0

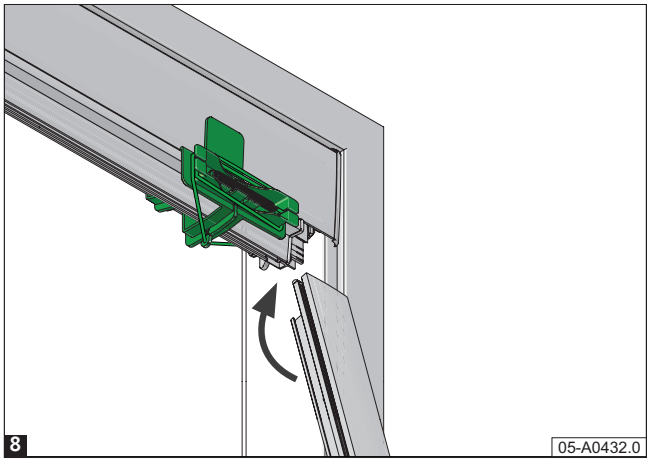
8
05-A0432.0

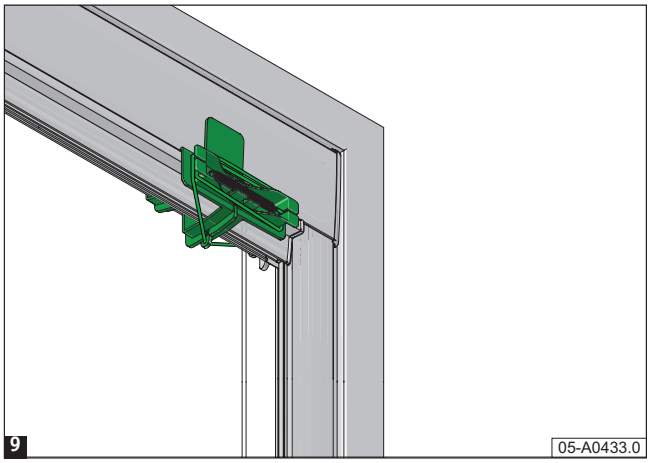
9
05-A0433.0

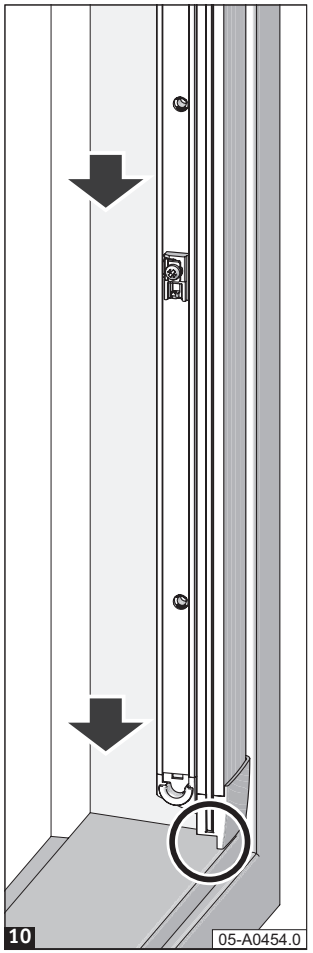
10
05-A0454.0

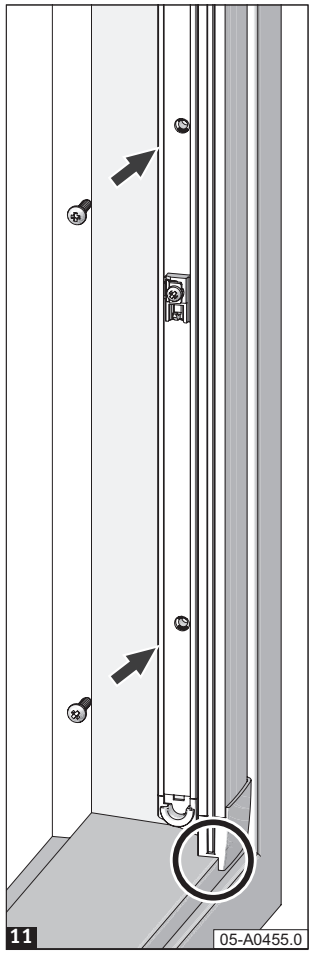
11
05-A0455.0

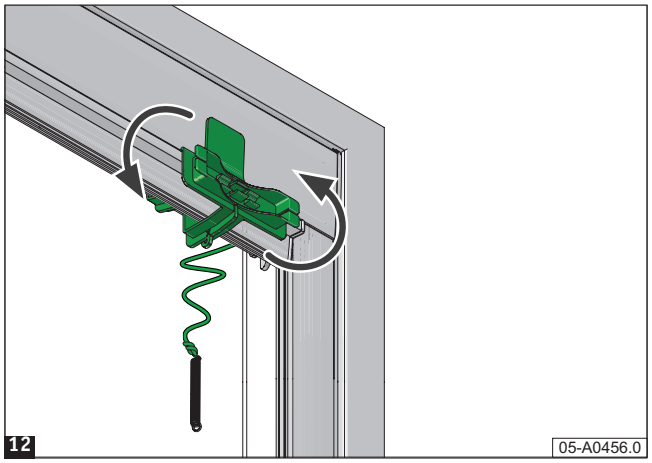
12
05-A0456.0

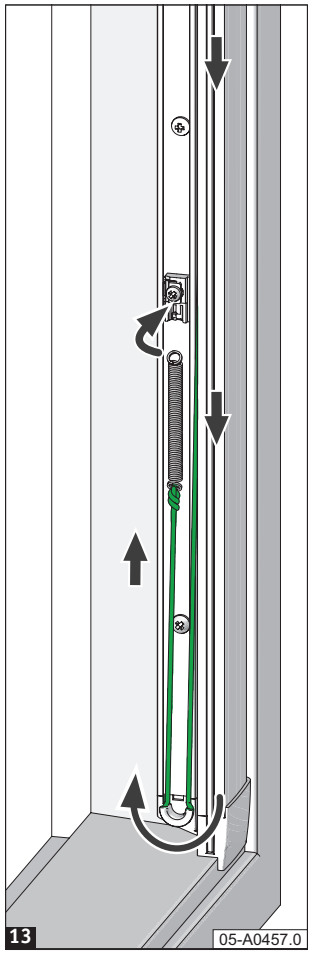
13
05-A0457.0

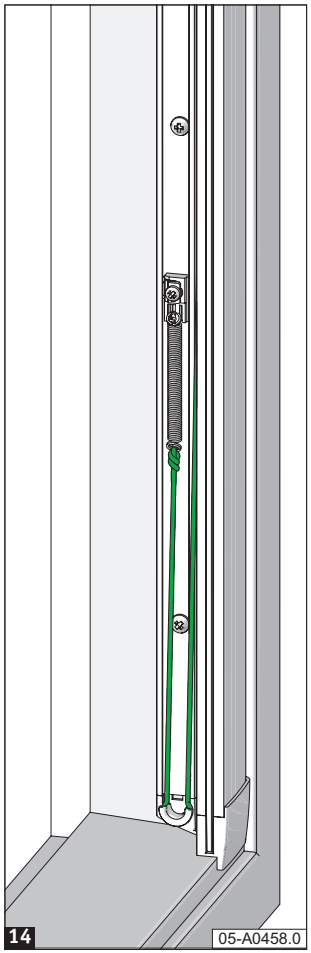
14
05-A0458.0

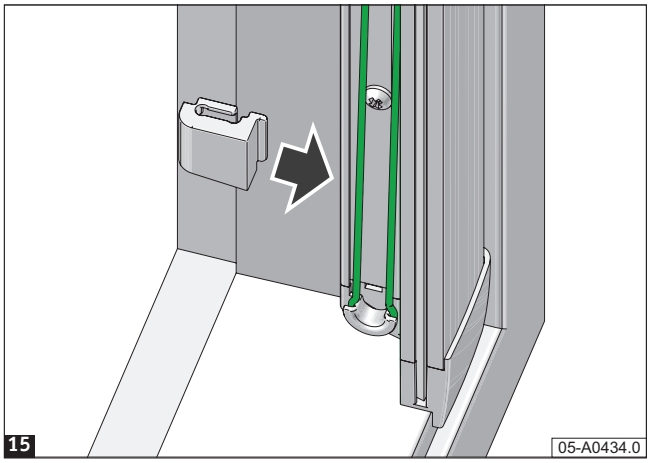
15
05-A0434.0

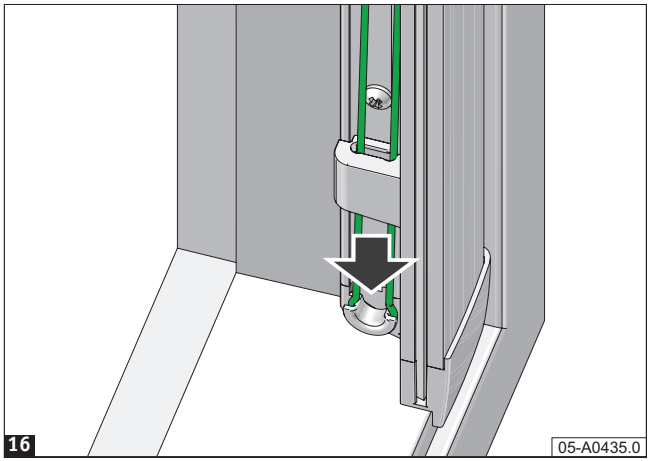
16
05-A0435.0

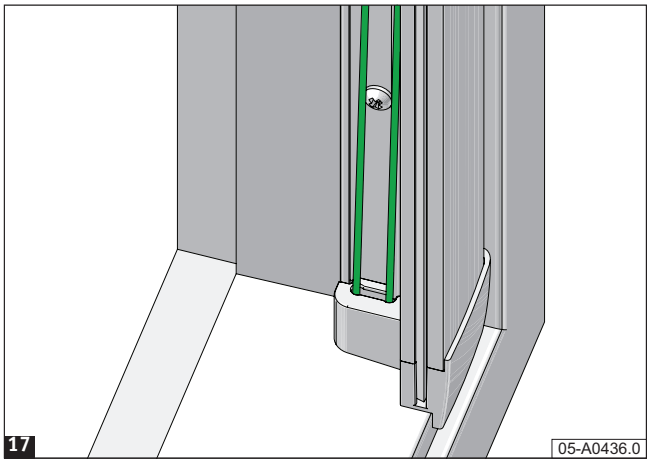
17
05-A0436.0

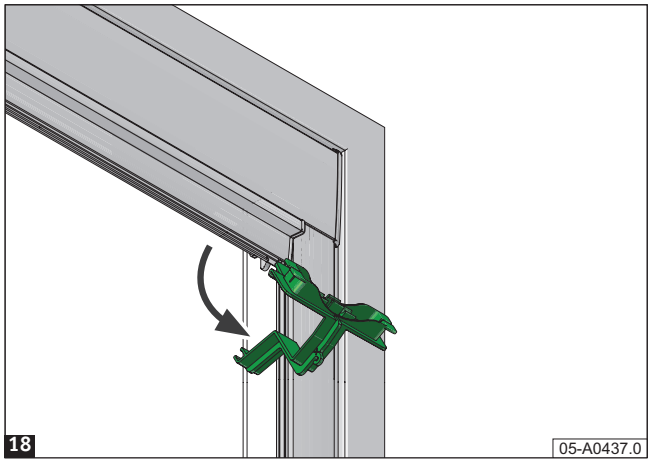
18
05-A0437.0

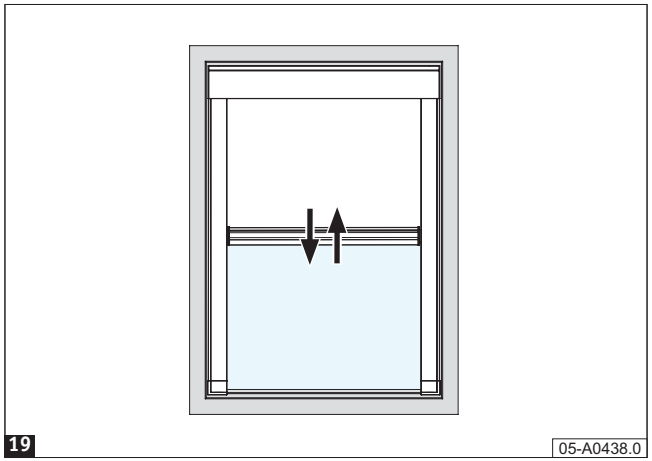
19
05-A0438.0

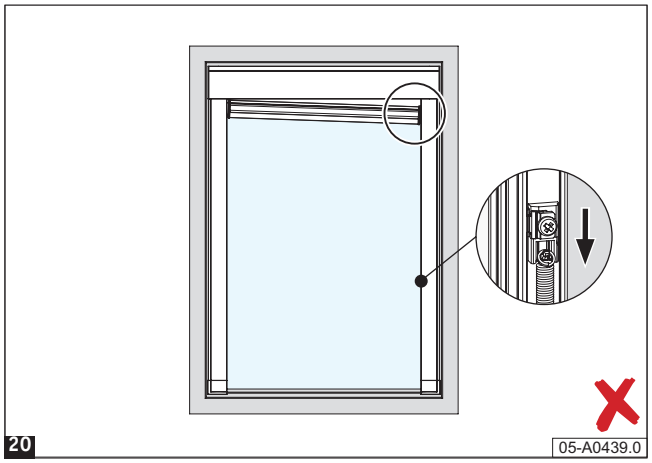
20
05-A0439.0

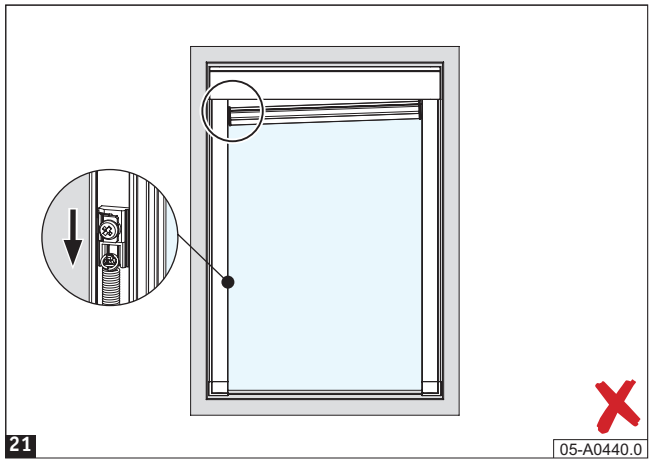
21
05-A0440.0

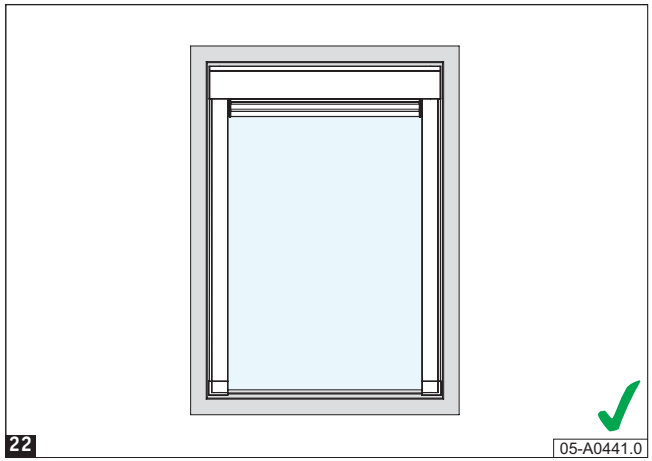
22
05-A0441.0

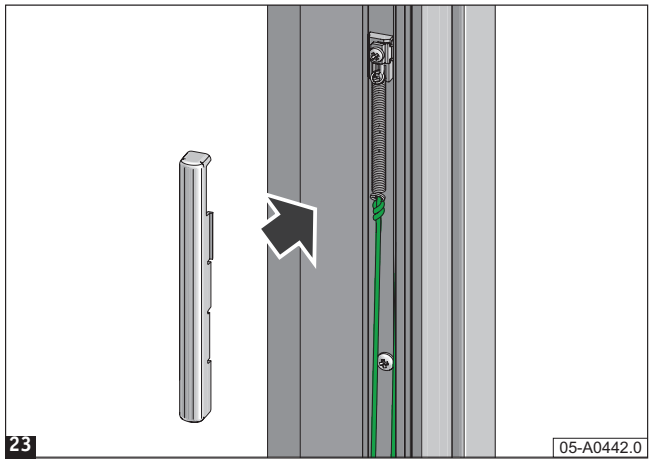
23
05-A0442.0

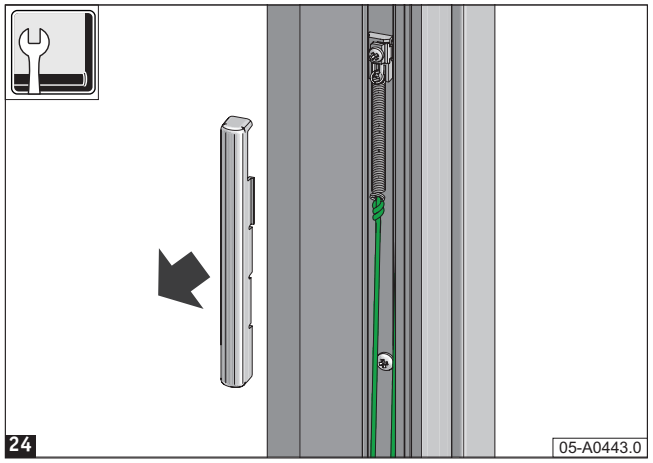
24
05-A0443.0

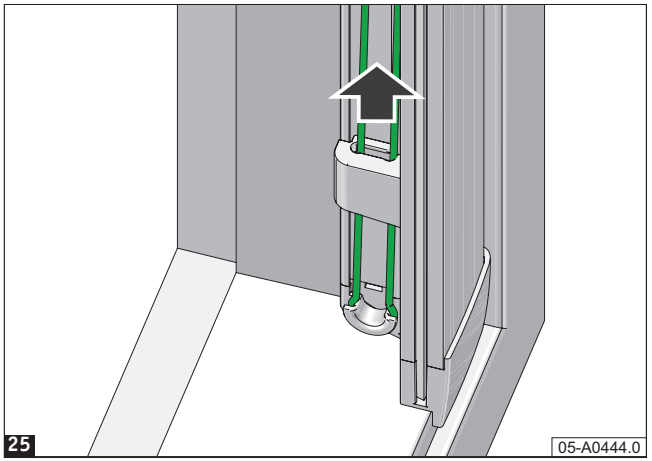
25
05-A0444.0

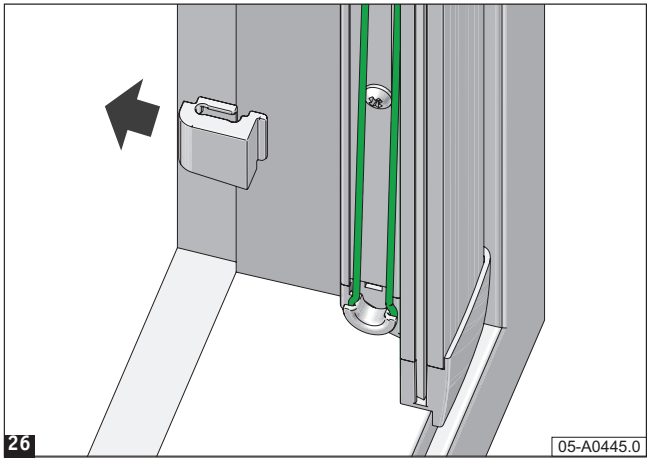
26
05-A0445.0

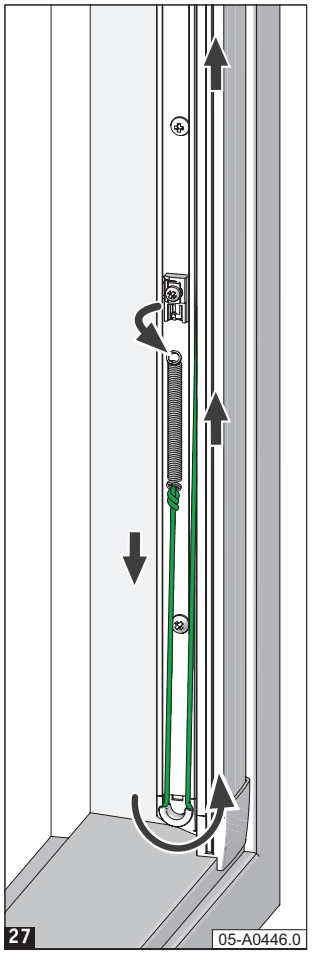
27
05-A0446.0

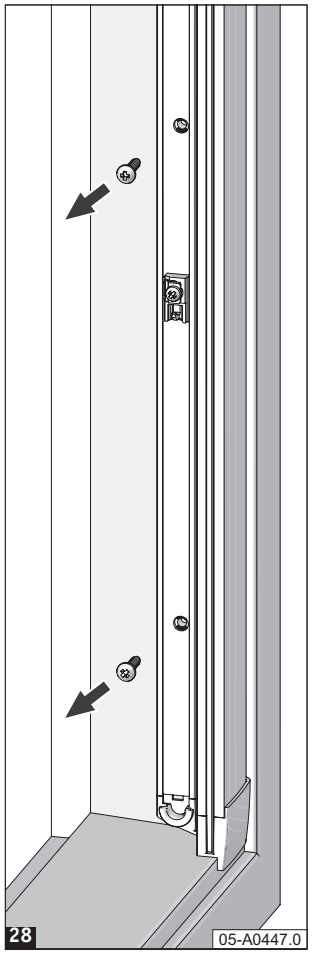
28
05-A0447.0

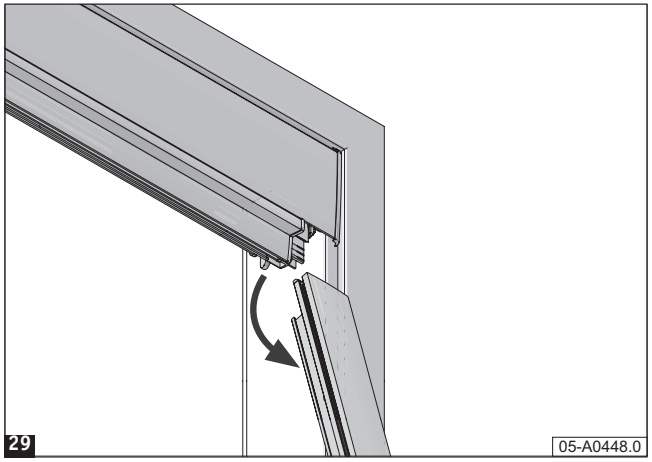
29
05-A0448.0

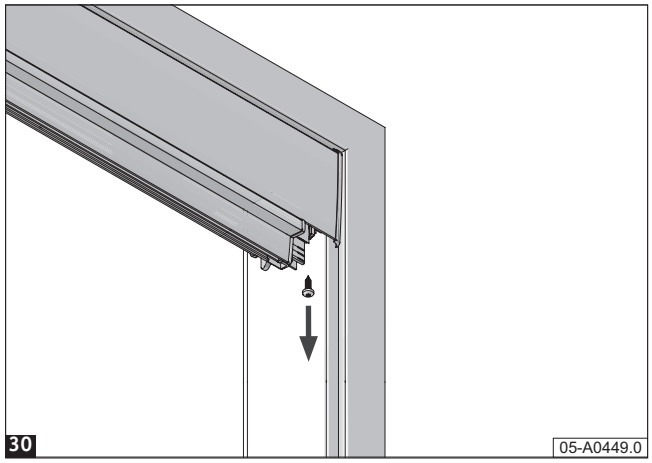
30
05-A0449.0

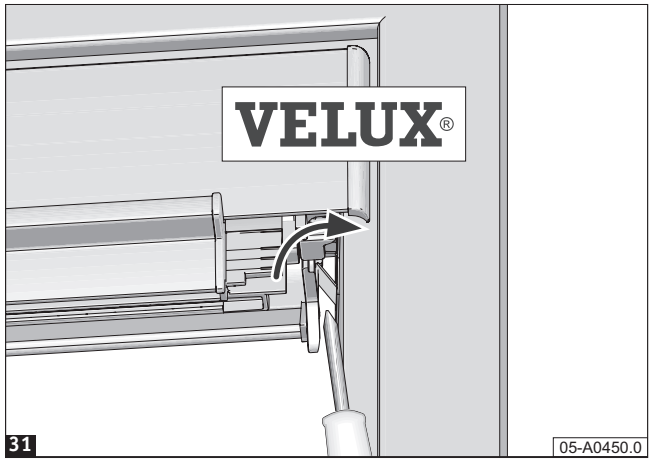
VELUX®
31
05-A0450.0

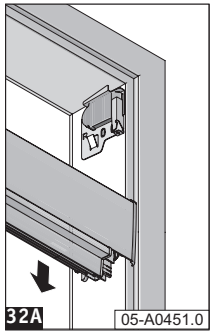
32A
05-A0451.0

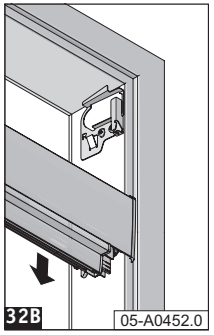
32B
05-A0452.0

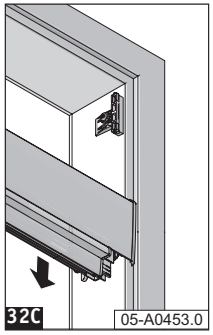
32C
05-A0453.0